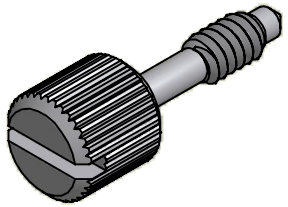

ISO SCALE 2 : 1

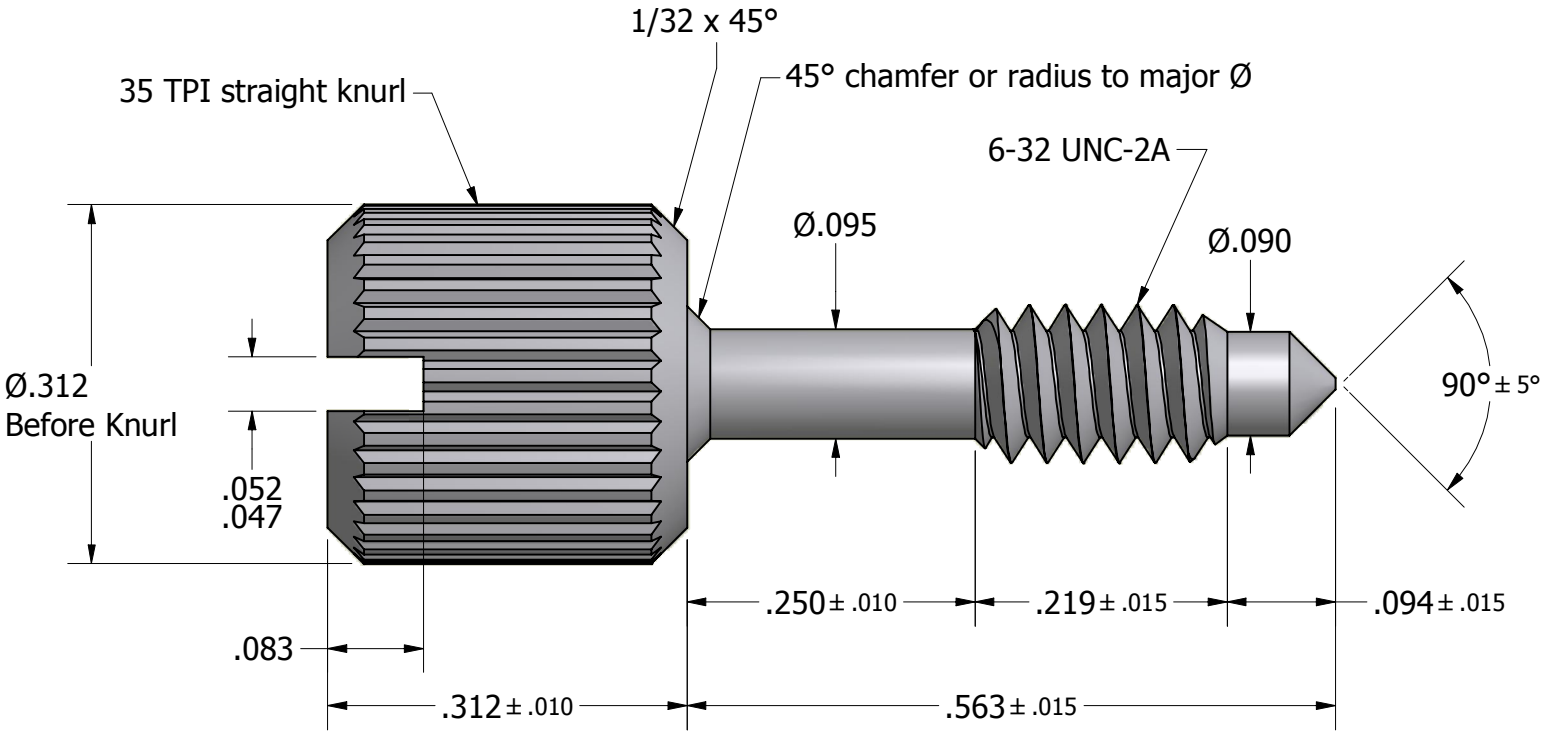

Tolerances Unless Otherwise Specified: **.xx Decimal: ± .02** **.xxx Decimal: ± .005** **Fraction: ± 1/64** **Angle: ± 2°**	**LYN-TRON, INC.** Part Number: **ST3391** Description: **5/16 Rnd Captive Panel Screw -- Type 2**		
Drawn By: **KenanG 6/14/2011**	Gauge:	Material: **Steel**	Scale: **6:1**

All information on this document is owned by Lyn-Tron, Inc. and is not to be copied or used without prior written consent.

LYN-TRON, INC. www.lyntron.com 800-423-2734